NI PXI-2557 Specifications

2.5 GHz 75 Ω 8 x 1 Multiplexer (SP8T)

このドキュメントには、日本語ページも含まれています。

This document lists specifications for the NI PXI-2557 multiplexer module. All specifications are subject to change without notice. Visit `ni.com/manuals` for the most current specifications.

Topology ..... 8 × 1 multiplexer

Refer to the *NI Switches Help* for detailed topology and front panel connector information.

Caution To ensure the specified EMC performance, operate this product only with shielded cables and accessories.

Caution Device relays might change state momentarily during electrostatic discharge.

Caution Refer to the *Read Me First: Safety and Electromagnetic Compatibility* document at `ni.com/manuals` for important safety and compliance information.

About These Specifications

Specifications characterize the warranted performance of the instrument under the stated operating conditions.

Typical Specifications are specifications met by the majority of the instrument under the stated operating conditions and are tested at 23 °C. Typical specifications are not warranted.

Input Characteristics

All input characteristics are DC, AC_{rms}, or a combination unless otherwise specified.

Maximum switching voltage ..... 30 V

Maximum switching current ..... 0.5 A
(per channel)

Maximum carry current ..... 0.5 A
(per channel)

Maximum RF power ..... 10 W

Caution The switching power is limited by the maximum switching current and the maximum voltage. Channel to common switching power must not exceed 10 W.

Note National Instruments recommends against switching active RF signals. As a relay actuates, the channel is momentarily unterminated. Some RF sources can be damaged by reflections if their outputs are not properly terminated. Refer to your RF source documentation for more information.

Typical DC path resistance

Initial ..... <0.35 Ω

End-of-life ..... ≥1.0 Ω

Path resistance is a combination of relay contact resistance and trace resistance. Contact resistance typically remains low for the life of a relay. At the end of relay life, the contact resistance rises rapidly above 1.0 Ω.

RF Performance Characteristics

Characteristic impedance (Z_0) ..... 75 Ω nominal

Values in parentheses are typical.

Insertion loss

≤1 GHz ..... <1.1 dB (<0.6 dB)

≤2 GHz ..... <1.7 dB (<1.3 dB)

≤2.5 GHz ..... <2.15 dB (<1.75 dB)

Voltage standing wave ratio (VSWR)

≤1 GHz ..... <1.25 (<1.15)

≤2 GHz ..... <1.5 (<1.35)

≤2.5 GHz ..... <1.75 (<1.5)

Typical isolation

≤1 GHz.....>48 dB

≤2 GHz.....>41 dB

≤2.5 GHz.....>41 dB

Typical channel-to-channel skew....<25 ps

Typical propagation delay.....1.2 ns

Typical rise time (10% to 90%) .....91 ps

Refer to Figures 1, 2, and 3 for typical insertion loss, typical VSWR, and typical isolation, respectively.

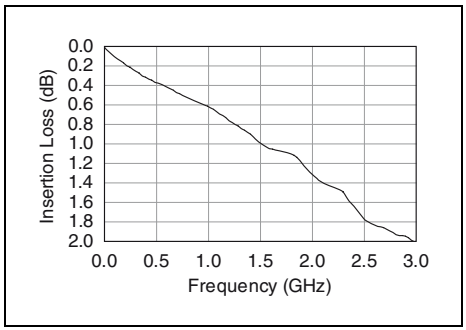

Figure 1. Typical Insertion Loss

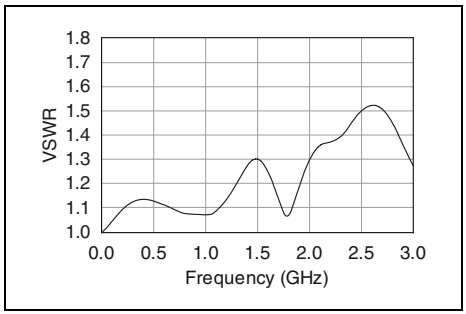

Figure 2. Typical VSWR

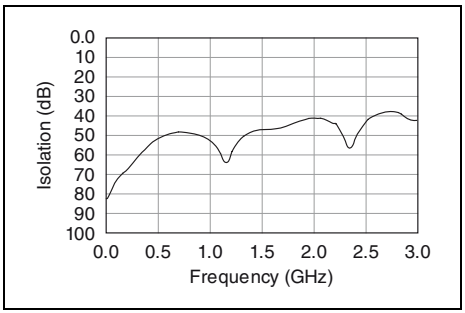

Figure 3. Typical Isolation

Dynamic Characteristics

Maximum relay operate time..... 10.4 ms

Note Certain applications may require additional time for proper settling. For information about including additional settling time, refer to the *NI Switches Help*.

Expected relay life

Mechanical ..... 1×10^6 cycles

Electrical..... 3×10^5 cycles
(30 V, 10 mA, DC resistive)

Trigger Characteristics

Input trigger

Sources ..... PXI trigger lines 0–7

Minimum pulse width..... 150 ns

Note The NI PXI-2557 can recognize trigger pulse widths less than 150 ns by disabling digital filtering. For information about disabling digital filtering, refer to the *NI Switches Help*.

Output trigger

Destinations..... PXI trigger lines 0–7

Pulse width ..... Programmable
(1 µs to 62 µs)

Amplicon.com | IT and Instrumentation for industry
Amplicon
Sales: +44 (0) 1273 570 220 Website: www.amplicon.com Email: sales@amplicon.com

Physical Characteristics

Relay type ..... Electromechanical, latching

I/O connectors ..... 9 mini-75 Ohm SMB jacks, gold plated

PXI power requirement ..... 3.7 W at 5 V, 0.3 W at 3.3 V

Dimensions (L × W × H) ..... 3U, one slot, PXI/cPCI module 21.6 × 2.0 × 13.0 cm (8.5 × 0.8 × 5.1 in.)

Weight ..... 227 g (8.0 oz)

Environment

Operating temperature ..... 0 °C to 55 °C

Storage temperature ..... –20 °C to 70 °C

Relative humidity ..... 5% to 85%, noncondensing

Pollution Degree 2

Maximum altitude ..... 2,000 m

Indoor use only.

Shock and Vibration

Operational Shock ..... 30 g peak, half-sine, 11 ms pulse (Tested in accordance with IEC-60068-2-27. Test profile developed in accordance with MIL-PRF-28800F.)

Random Vibration

Operating ..... 5 to 500 Hz, 0.3 g_{rms}

Nonoperating ..... 5 to 500 Hz, 2.4 g_{rms} (Tested in accordance with IEC-60068-2-64. Nonoperating test profile exceeds the requirements of MIL-PRF-28800F, Class 3.)

Figure 4 shows the NI PXI-2557 power-on state.

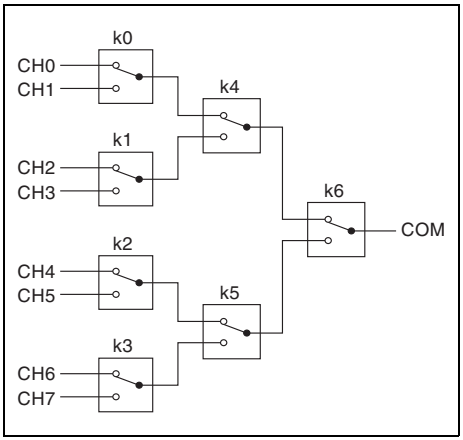

Figure 4. NI PXI-2557 Power-On State

Amplicon.com | IT and Instrumentation for industry
Amplicon
Sales: +44 (0) 1273 570 220 Website: www.amplicon.com Email: sales@amplicon.com

Figure 5 shows the NI PXI-2557 front panel connector.

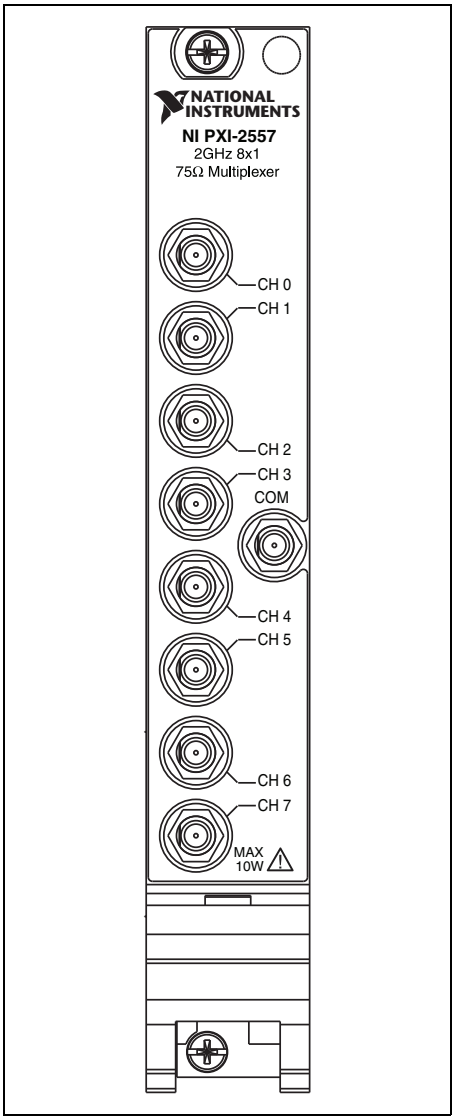

Figure 5. NI PXI-2557 Front Panel Connector

Note For topology-specific connection information, refer to your device in the *NI Switches Help*.

Accessories

Visit `ni.com` for more information about the following accessories.

Table 1. NI Accessories for the NI PXI-2557

Accessory	Length	Part Number
Mini-75 Ohm SMB plug to mini-75 Ohm SMB plug coaxial cable	0.3 m	197211-0R3
	1.0 m	197211-01
Type F female to mini-75 Ohm SMB plug coaxial cable	0.3 m	197210-0R3

Compliance and Certifications

Safety

This product meets the requirements of the following standards of safety for electrical equipment for measurement, control, and laboratory use:

- IEC 61010-1, EN 61010-1
- UL 61010-1, CSA 61010-1

Note For UL and other safety certifications, refer to the product label or the *Online Product Certification* section.

Electromagnetic Compatibility

This product meets the requirements of the following EMC standards for electrical equipment for measurement, control, and laboratory use:

- EN 61326-1 (IEC 61326-1): Class A emissions; Basic immunity
- EN 55011 (CISPR 11): Group 1, Class A emissions
- AS/NZS CISPR 11: Group 1, Class A emissions
- FCC 47 CFR Part 15B: Class A emissions
- ICES-001: Class A emissions

Note For EMC declarations and certifications, refer to the *Online Product Certification* section.

CE Compliance

This product meets the essential requirements of applicable European Directives as follows:

- 2006/95/EC; Low-Voltage Directive (safety)
- 2004/108/EC; Electromagnetic Compatibility Directive (EMC)

Amplicon.com | IT and Instrumentation for industry
Amplicon
Sales: +44 (0) 1273 570 220 Website: www.amplicon.com Email: sales@amplicon.com

Online Product Certification

To obtain product certifications and the Declaration of Conformity (DoC) for this product, visit `ni.com/certification`, search by model number or product line, and click the appropriate link in the Certification column.

Environmental Management

NI is committed to designing and manufacturing products in an environmentally responsible manner. NI recognizes that eliminating certain hazardous substances from our products is beneficial to the environment and to NI customers.

For additional environmental information, refer to the *NI and the Environment* Web page at `ni.com/environment`. This page contains the environmental regulations and directives with which NI complies, as well as other environmental information not included in this document.

Waste Electrical and Electronic Equipment (WEEE)

EU Customers At the end of the product life cycle, all products *must* be sent to a WEEE recycling center. For more information about WEEE recycling centers, National Instruments WEEE initiatives, and compliance with WEEE Directive 2002/96/EC on Waste Electrical and Electronic Equipment, visit `ni.com/environment/weee`.

电子信息产品污染控制管理办法 （中国 RoHS）

中国客户 National Instruments 符合中国电子信息产品中限制使用某些有害物质指令 (RoHS)。关于 National Instruments 中国 RoHS 合规性信息，请登录 `ni.com/environment/rohs_china`。
(For information about China RoHS compliance, go to `ni.com/environment/rohs_china`.)

Amplicon.com | IT and Instrumentation for industry
Amplicon
Sales: +44 (0) 1273 570 220 Website: www.amplicon.com Email: sales@amplicon.com